# EX 90.1 5G AI AL DR CI

Stainless steel gas hob with frontal control knobs of butane and natural gas

Auto ignition

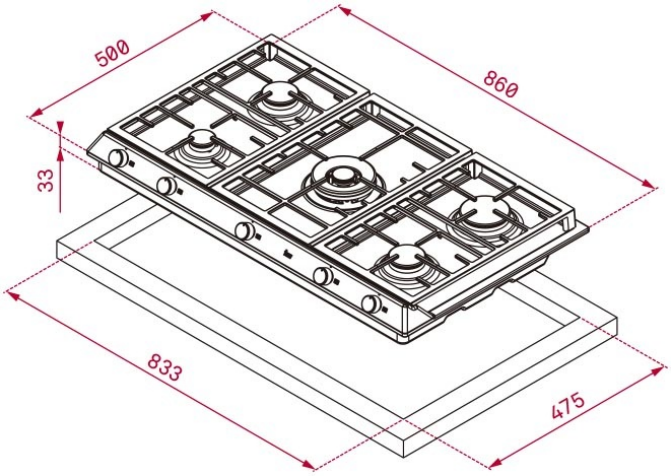


## REFERENCE

REF: 112610044 EAN: 8434778019544

## FEATURES

Gas hob
Frontal control knobs
5 cooking zones
1 double ring burner, 4.00 kW
1 fast burner, 2.8 kW
3 semi fast burners, 1.7 kW
Stainless steel surface
Auto ignition
Cast iron grids
Maximum nominal power 12.050 W
Optional: Wok support

## DIMENSIONS

**Product height (mm):** 84
**Product width (mm):** 860
**Product depth (mm):** 500
**Product length (mm):**
**Net weight (Kg):** 13,5

## TECHNICAL DETAILS

Power rate (V): 220-240
Frequency (Hz): 50/60
Maximum Nominal Power (W): -

## COLOURS

112610044 Stainless steel

## ENERGY EFFICIENCY

Power consumption in standby mode (W): -
Time to reach standby mode (min): -