EWH 80 H VR01

Water heater with double installation system and 80L capacity

ELCB Earth Leakage Circuit Breaker | Humidity Control | Overheating Protection | Type of Installation | Dry Heating Protection

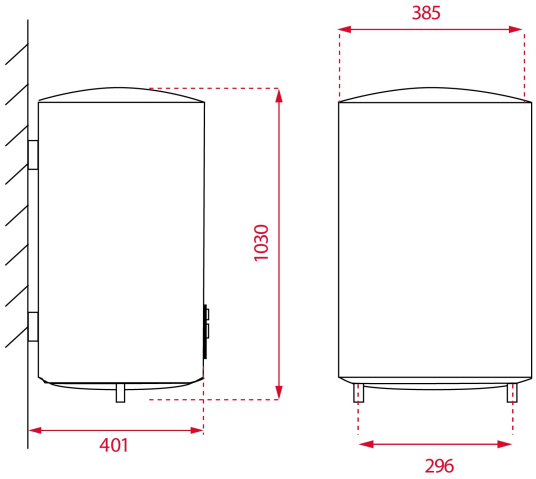

REFERENCE

REF: 42080280 EAN: 8421152131961

FEATURES

Vertical and horizontal installation
Capacity: 73 litres
Average number of users: 2-4
Tank ultra-resistant protective polish
Enamelled heating element
Temperature regulation 30º - 75º C
Max input pressure: 0.75 Mpa
Thermometer
Over-pressure protection
Over-heating protection
Humidity protection
Dry-heating protection
Earth leakage circuit breaker ELCB
Power rate: 1500 W
Isolation thickness: 20 mm

DIMENSIONS

Product height (mm): 1030
Product width (mm): 385
Product depth (mm): 385
Product length (mm):
Net weight (Kg): 26,31

COLOURS

42080280 White