IC 939 Professional Kitchen Tap Mixer with flexible spring

Anti-Scale Aerator

High Resistance

Pull Down Shower

Swivel Spout

DESCRIPTION	Professional Kitchen Tap Mixer with flexible spring
LIFE STYLE	Maestro
COLOURS	
REFERENCE	REF. 339390200 EAN. 8421152131534

IC 939

FEATURES

Professional kitchen tap
Swivel and flexible spout
Anti-scale aerator
Pull-down shower 1 function: aerated spray
High resistant flexible spring
Stainless steel flexible hose
Cartridge with ceramic discs of high resistance
Highly precise temperature control
Greater handling sensitivity with smoother movements
3/8" flexible inlet pipes

IC 939

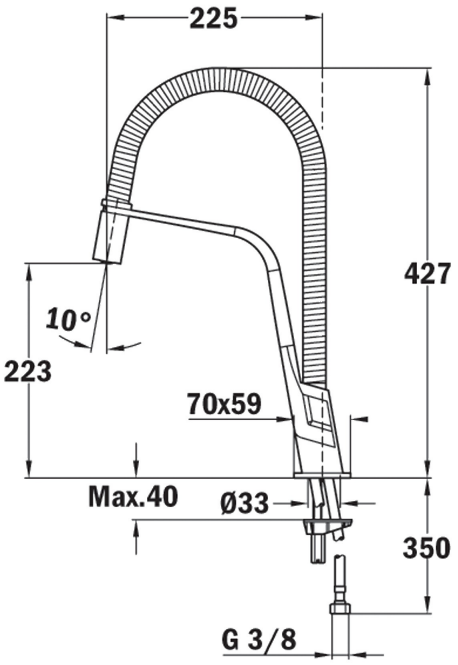

DIMENSIONS

Product height (mm): 427
Product width (mm):
Product depth (mm):
Product length (mm):
Net weight (Kg): 2,85

TECHNICAL DETAILS

MODELS	**Type of installation:** Free standing