American Professional 80 M-XP 1B 3-in-1 Installation stainless steel sink with one bowl and SilentSmart



200mm depth

Antibacterial

DESCRIPTION	3-in-1 Installation stainless steel sink with one bowl and SilentSmart
COLOURS	
REFERENCE	REF. 115000056 EAN. 8434778019230

American Professional 80 M-XP 1B

FEATURES

American Professional Series
Stainless steel sink, Polished finish
Apron front sink
One bowl
3-in-1 installation possibilities: undermount, top or flush
3½” SQ manual basket waste with siphon
Decorative SQ cover
SilentSmart, 50% less noise
200 mm deep bowl
80 cm base unit

American Professional 80 M-XP 1B

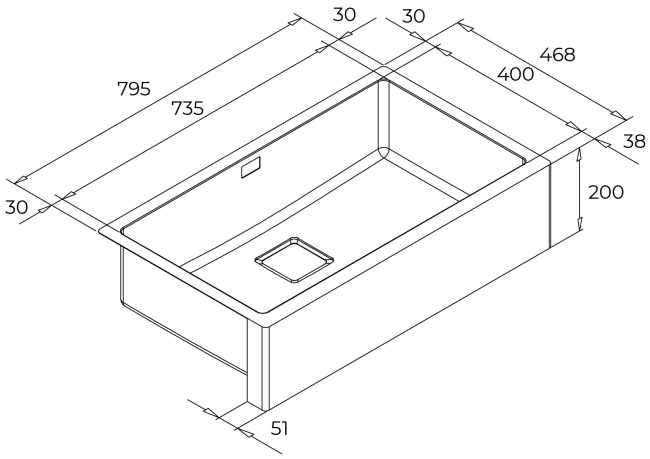

DIMENSIONS

Product height (mm):
Product width (mm): 468
Product depth (mm):
Product length (mm): 795
Net weight (Kg): 10,72

TECHNICAL DETAILS

MAIN BOWL

Main Bowl Length (mm): 735
Main Bowl Width (mm): 400
Main Bowl Depth (mm): 200

OTHER FEATURES

Material: Stainless Steel
Type of installation: Flush,Top,Undermount
Valve hole type: 3½" SQUARED
Overflow hole: Rectangular
Sink Bowl / Top thickness (mm): 1,0

OTHERS

Base unit (cm): 80

SINK LAY OUT	**Number of bowls:** 1 **Number of drainers:** 0
ACCESSORIES	**Soundproof:** Yes **SilentSmart:** Yes **Installation clips:** Yes **Siphon:** Yes