Astral 70 E-TG 1B 2D
Inset sink with pne bowl and two drainers

ՀՂՈՒՄ

REF: 40143565 EAN: 8421152159774

ԱՌԱՆՁՆԱՀԱՏԿՈՒԹՅՈՒՆՆԵՐ

Tegranite+ sink
Corner bowls
Inset installation
3½" automatic basket waste
205 and 120 mm deep bowls
70 cm base unit

ՉԱՓԵՐԸ

Product height (mm):
Product width (mm): 500
Product depth (mm): 205
Product length (mm): 1002
Net weight (Kg): 12,00

Colour Intensity | Easy Clean | Food safe | High resistance

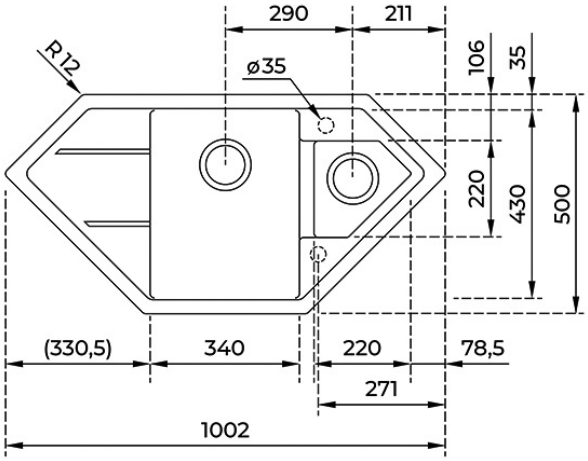

ԳՈՒՅՆԵՐ

40143565	Topasbeige
40143532	White
40143532	Metallic grey
40143532	Sandbeige
40143532	Carbon
40143532	Metallic black