MAESTRO **Stage 60 E 1½B ½D**

Inset sink One bowl and one drainer

Antibacterial Lifetime warranty

ՀՂՈՒՄ

REF: 40108250 EAN: 8421152095713

ԱՌԱՆՁՆԱՀԱՏԿՈՒԹՅՈՒՆՆԵՐ

Stage Series
Stainless steel sink
One bowl, one auxiliary bowl and half drainer
Inset installation
3½" automatic basket waste with siphon
190 and 130 mm deep bowls
60 cm base unit

ՉԱՓԵՐԸ

Product height (mm):
Product width (mm): 565
Product depth (mm): 190
Product length (mm): 816
Net weight (Kg): 4,6
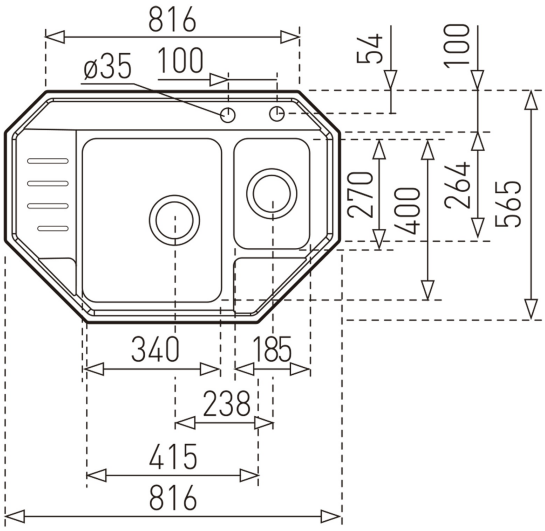
ԳՈՒՅՆԵՐ