INCA Bath/Shower Mixer

Shower tap INCA



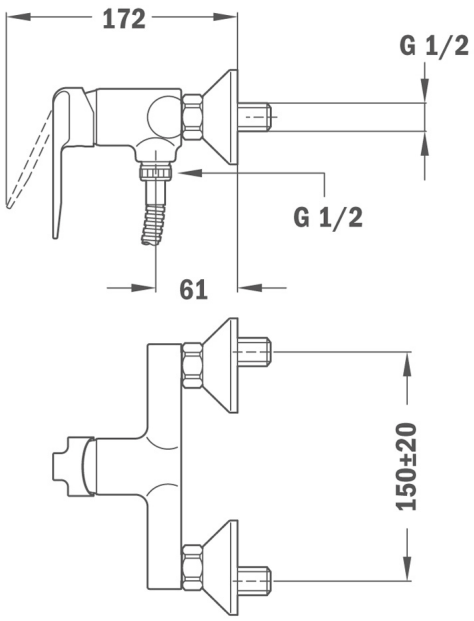

REFERENSI

REF: 5323112 **EAN:** 8413509193494

FITUR

Without BASIC shower set
Equipped with noise reducers
Quality Certification: AENOR

DIMENSI

Product height (mm):
Product width (mm):
Product depth (mm):
Product length (mm):
Net weight (Kg):

WARNA

5323112 Chrome