MB2 PULL OUT

[illegible]

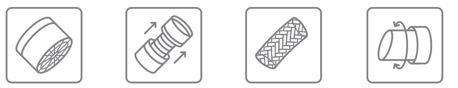

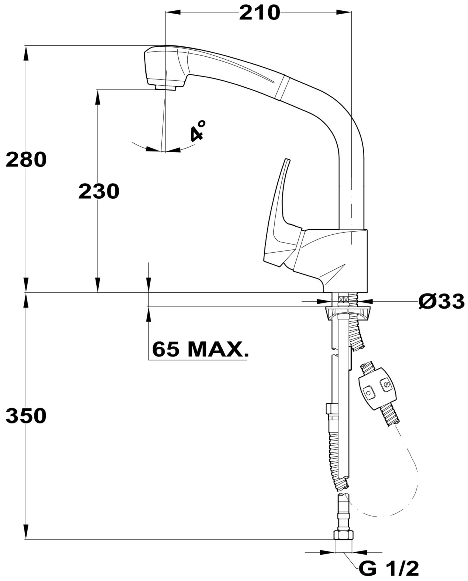

[illegible]

REF: 40931802 EAN: 8413509195009

[illegible]

[illegible] 2 [illegible]

[illegible] 1/2”

[illegible]

Product height (mm): 280
Product width (mm):
Product depth (mm):
Product length (mm):
Net weight (Kg): 2,4

[illegible]

40931802 [illegible]