EX 70.1 3G AI AL CI
□□□□□□□□ 3 □□□□□□ □□□□ 70 □□.

□□□□□□□□□□□□□□

REF: 112610001 EAN: 8434778002249

□□□□□□□□□□□□

□□□□□□□□ 3 □□□□□□ □□□□ 70 □□.
□□□□□□□□□□□□□□□□□□□□□□□□□□□□
□□□□□□□□□□□□□□□□□□□ 3 □□□□:
1 □□□□□□ □□□□□□ 2 □□□□ (4 □□□□□□□□□□)
1 □□□□□□ (2.8 □□□□□□□□□□)
1 □□□□□□ (1.75 □□□□□□□□□□)
□□□□□□□□□□□□□□□□□□□□□□□□□□□□ □□□□□□□□□□□□□□□□□□□□□□□□
□□□□□□□□□□□□□□□□□□□□□□□□(□□□□□□)
□□□□□□□□□□□□□□□□□□□□□□□□
□□□□□□□□□□□□□□□□□□□: 8.55 □□□□□□□□□□

□□□□□□□□
□□□
□□□□□□□□□□

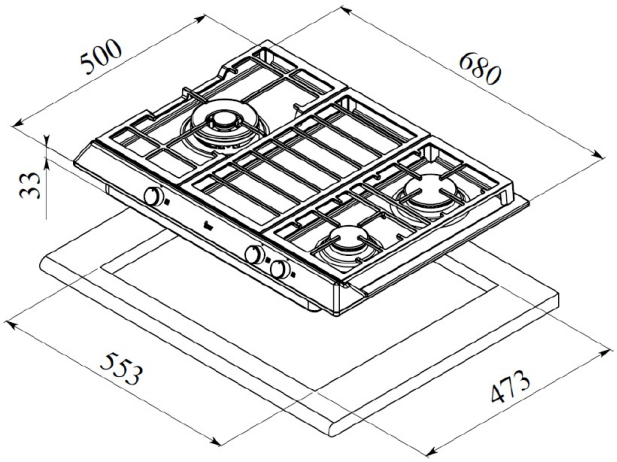

□□□□

Product height (mm): 33
Product width (mm): 680
Product depth (mm): 500
Product length (mm):
Net weight (Kg): 11,6

□□□□□□□□□□□□□□□□□□□□□□□□

□□□□□□□□□□□□ (V): -
□□□□□□□□ (Hz): -
□□□□□□□□□□□□□□□□□□□ (W): -

□□

112610001 □□□□□□□□□□□□□□□

□□□□□□□□□□□□□□□□□□□□□□□□□□□□□□

Power consumption in standby mode (W): -
Time to reach standby mode (min): -