IC 915

□□□□□□□□□□□□□□□□□ □□□□□□□□□□□□□□□□□-□□□

□□□□□□□□□□□□□□

REF: 33915020N EAN: 8421152091364

□□□□□□□□□□□□

□□□□□□□□□□□□□□□□□ □□□□□□□□-□□□□□□□□□ □□□□□□
□□□□□□□□□□□□□□□□□
□□□□□□□□□□□□□□□□□□-□□□
□□□□□□□□□□□□□□□□□□□□□□□
□□□□□□□□□□□□□□□□□□□□□□□□□□□□□□□□□□□
□□□□□□□□□□□□□□□□□□□□□□□□□□□□□
□□□□□□□□-□□□□□□□□□□□□□□□□□□□□□□
□□□□□□□□□□□□□□□□□□□□□□□□□□□ □□□□ 1/2”

□□□□□□□
□□□□□□□
□□□□□□□
□□□□

□□□□□□
□□□□□□□□□□
□□□□□□□
□□□□-□□□

□□□□

Product height (mm): 302
Product width (mm):
Product depth (mm):
Product length (mm):
Net weight (Kg): 2,4

□□
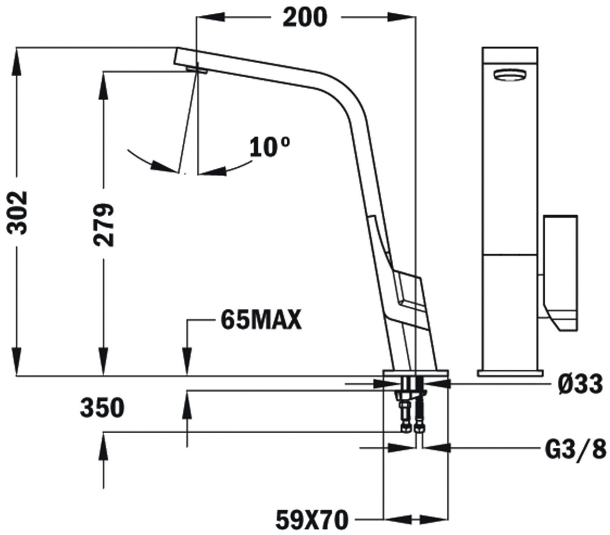
33915020N □□□□□