CC 485

[illegible] [illegible]
[illegible] [illegible]

[illegible] LED

[illegible]

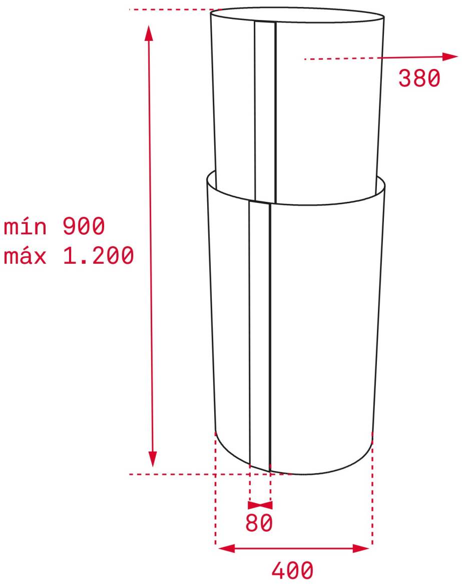

[illegible]

REF: 40480330 EAN: 8421152145869

[illegible]

[illegible]
[illegible]
[illegible] 3 [illegible] + 1 [illegible]
[illegible] ([illegible].[illegible]./[illegible]): 920
[illegible] ([illegible]): 72
[illegible] LED 2 [illegible]
[illegible] 1 [illegible]
[illegible]
[illegible]
[illegible]
[illegible]

[illegible]

Product height (mm): 900-1200
Product width (mm): 400
Product depth (mm): 400
Product length (mm):
Net weight (Kg): 21,5

[illegible]

[illegible]: A
[illegible] (LwA) [illegible] (dB): 50
[illegible] (LwA) [illegible] (dB): 72
[illegible] (LwA) [illegible] (dB): 78
Ø [illegible] (mm): 150

[illegible]

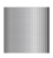 40480330 [illegible]