TKI3 145 D

□□□□□□□□□□□ □□□□□□□□□□□□□□□□□□□□□□□□□□□□□□□□□ (Built-under), □□□□□□□□ 82 □□.

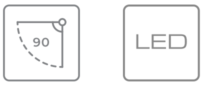

Easy 90 □□ LED

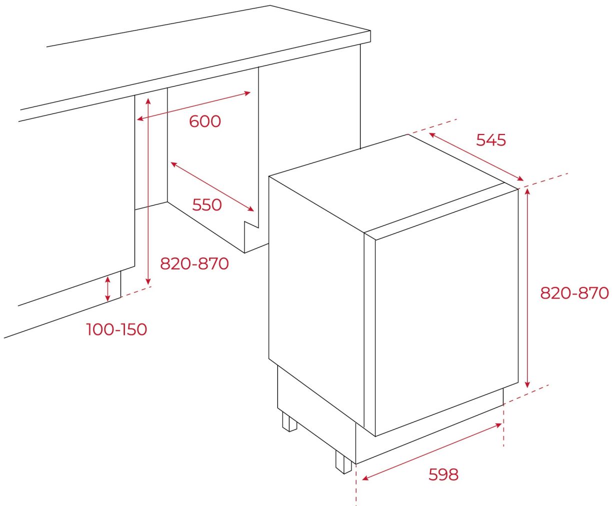

□□□□□□□□□□□□□□□□

REF: 40693006 EAN: 8421152114445

□□□□□□□□□□□□

□□□□□□□□□□□□ □□□□□□□□□□□□□□□□□□□□□□□□□□□□□□□□□□□ (Built-under)
□□□
□□
□□□□□□□□□□□□□□□□□□□□□□□□ 3 □□□□□
□□□□□□□□□□□□□□□□□□□□□□□□□□ 1 □□□□□
□□□□□□□□□□□□□□□□□□□ □□□□□□□□□□□□□□□□□□□□□□□□□□□□□□□□□□
□□□□□□□□□□□□□□□□□□□□ LED
□□ (Door on Door)
□□□□□□□□□□□□□□□□□□□□□□□□□□□□□□□□□□□□□□: □□□□□ SN/T
□□□□□□□□□□□□□□□□□□□□□□□□□□□□□□□□ □□□□□□□□□□-□□□□ □□□□□□□□□□□□□□□□□□□□□□
□□□□□□□□ (□□□□/□□□□□□□): 130 / 128 □□□□□

□□□□□

Product height (mm): 818
Product width (mm): 595
Product depth (mm): 545
Product length (mm):
Net weight (Kg): 29

□□□□□□□□□□□□□□□□□□□□□□□□□□□□□

□□ (UE 2019/2016): A++
□□□□□□□□□□□□□□□□□: SN/T
□□□□□□□□□□□□□□□□□□□□□□□□□□□□□□□ (Kw/day): 0,252
□□□□□□□□□□□□□□□□□□□□□□□□□□□□ (kWh/year): 92
□□□□□□□□□□□□□□□□□□□□□□□□□□□□□: NA
□□□□□□□□□□□□□□□□ (dBA): 40
□□□□□□□□□□□□□□□□□ (V): 230
□□□□□□□□□□□□ (Hz): 50

□□