# HLF 940

[illegible] SurroundTemp [illegible] 90 [illegible]. [illegible] 77 [illegible]

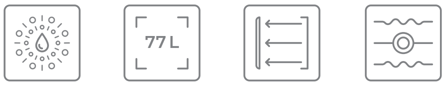

Hydroclean | 77 [illegible] | [illegible] | [illegible]

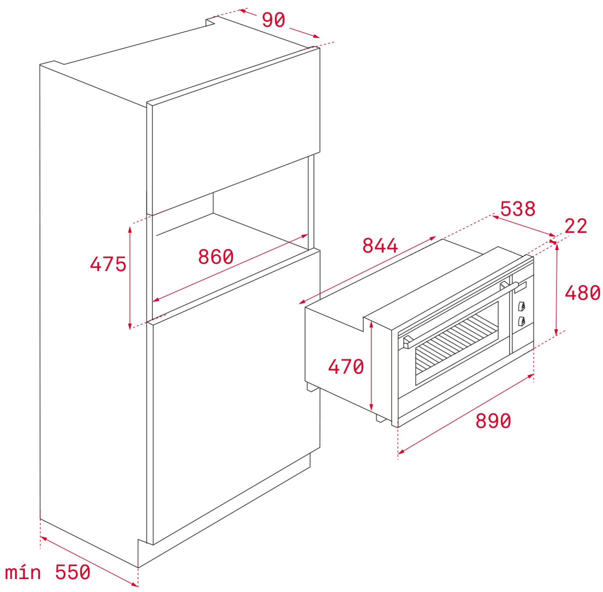


## [illegible]

REF: 41592223 EAN: 8421152155042

## [illegible]

[illegible] SurroundTemp
9 [illegible]
[illegible] HydroClean
[illegible] [illegible]
[illegible] ([illegible] [illegible]/ [illegible] [illegible])
[illegible] 5 [illegible]
[illegible] [illegible]
[illegible] 3 [illegible] [illegible]
[illegible] [illegible]
[illegible]
[illegible], [illegible] [illegible]
[illegible] ([illegible]/[illegible]): 91 / 77 [illegible]

## [illegible]

**Product height (mm):** 480
**Product width (mm):** 890
**Product depth (mm):** 538+22
**Product length (mm):**
**Net weight (Kg):** 51

## [illegible]

[illegible]: A
[illegible] (V): 220-240
[illegible] (Hz): 50/60
[illegible] (W): 3551

## [illegible]

41592223 [illegible] [illegible]