ML

□□□□□□□□□□□□□□□□□ □□□□□□ □□□□□□□□□□□-□□□

□□□□□□□□□□□□□□

REF: 8191362 EAN: 8421152747650

□□□□□□□□□□□□

□□□□□□□□□□□□□□□□□ □□□□□□□□-□□□□
□□□□□□□□□□□□□□□□□□-□□□
□□□□□□□□□□□□□□□□□□□□□□□
□□□□□□□□□□□□
□□□□□□□□□□□□□□□□□□□□□□□□□□□□□□□□□□
□□□□□□□□□□□□□□□□□□□□□□□□□□□□□□
□□□□□□□□-□□□□□□□□□□□□□□□□□□□□□□
□□□□□□□□□□□□□□□□□□□□□□□□□□□□□ □□□□ 1/2”

□□□□□□□
□□□□□□□
□□□□□□□
□□□□

□□□□□□
□□□□□□□□□□
□□□□□□□
□□□□-□□□

□□□□

Product height (mm): 167
Product width (mm):
Product depth (mm):
Product length (mm):
Net weight (Kg): 1

□□
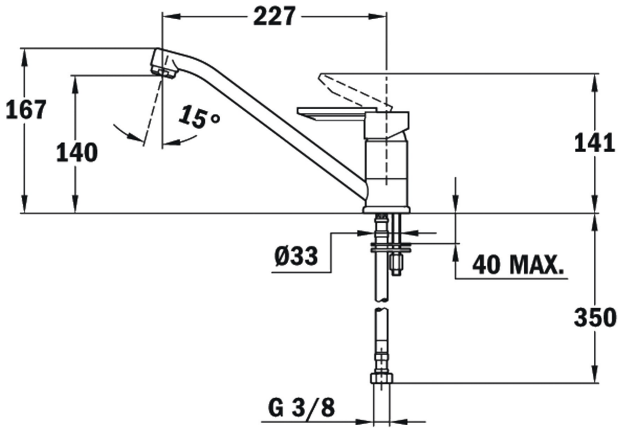
8191362 □□□□□□□□□□□