EX 90.1 5G AI AL DR CI

[illegible] 5 [illegible] [illegible] [illegible],
[illegible] 90 [illegible].

[illegible]
[illegible]
[illegible]

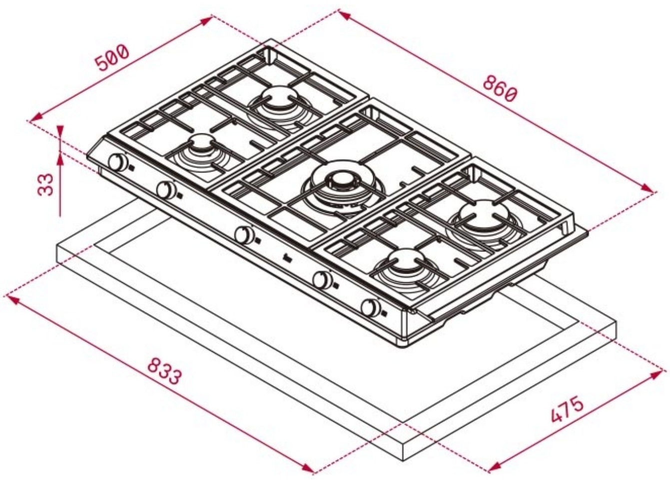

[illegible]

REF: 40212508 EAN: 8421152159934

[illegible]

[illegible]
[illegible]
[illegible] 5 [illegible]
1 [illegible] [illegible] 2 [illegible] [illegible] 4.0 [illegible]
1 [illegible] [illegible] 2.8 [illegible]
2 [illegible] [illegible] 1.75 [illegible]
1 [illegible] [illegible] 1.00 [illegible]
[illegible]
[illegible]
[illegible]
[illegible] [illegible]
[illegible] 11.30 [illegible]

[illegible]

Product height (mm): 84
Product width (mm): 860
Product depth (mm): 500
Product length (mm):
Net weight (Kg): 13,5

[illegible]

[illegible] (V): 220-240
[illegible] (Hz): 50/60
[illegible] (W): -

[illegible]

40212508 [illegible]

[illegible]

Power consumption in standby mode (W): -
Time to reach standby mode (min): -