ICC 915

□□□□□□□□□□□□□□□□□ Metallic Edition □□□□□□□□□□□□□□□□□-□□□

□□□□□□□□□□□□□□□

REF: 116030005 EAN: 8434778002980

□□□□□□□□□□□□□

□□□□□□□□□□□□□□□□□□ □□□□□□□□-□□□□□□□□□ □□□□ Metallic Edition □□
□□□□□□□□□□
□□□□□□□□□□□□□□
□□□□□□□□□□□□□□□□□-□□□
□□□□□□□□□□□□□□□□□□□□□□□□□
□□□□□□□□□□□□□□□□□□□□□□□□□□□□□□□□□□
□□□□□□□□□□□□□□□□□□□□□□□□□□□□□
□□□□□□□□-□□□ □□□□□□□□□□□□□□□□□□
□□□□□□□□□□□□□□□ PVD □□□□□□□□□□□□□□□□□
□□□□□□□□□□□□□□□□□□□□□□□□□□□□□ □□□□ 1/2”

□□□□□□□□ □□□□□□□□ □□□□□□□□ □□□□

Fingerprint-Proof

□□□□□□□ PVD

□□□□□□□ □□□□□□□□□□□ □□□□□□□□ □□□□-□□□

□□□□

Product height (mm): 313
Product width (mm):
Product depth (mm):
Product length (mm):
Net weight (Kg): 1,65

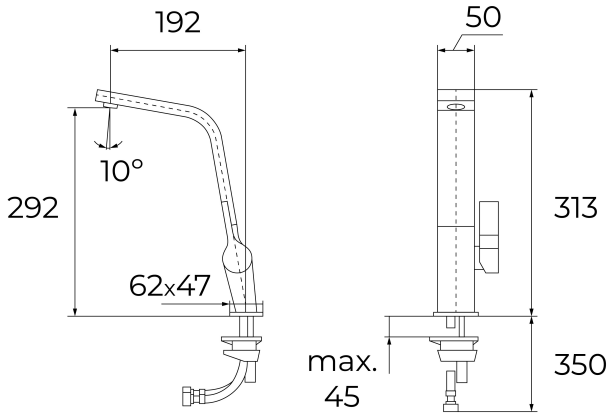

□□

116030005 □□□□□□□□□□□□□□

116030006 □□□□□□□□□□□□□