ICC 915

□□□□□□□□□□□□□□□□□ Metallic Edition □□□□□□□□□□□□□□□□□-□□□

□□□□□□□□□□□□□□□

REF: 116030006 EAN: 8434778003000

□□□□□□□□□□□□□

□□□□□□□□□□□□□□□□□□ □□□□□□□□-□□□□□□□□□ □□□□□ Metallic Edition □□
□□□□□□□□□□
□□□□□□□□□□□□□□
□□□□□□□□□□□□□□□□□-□□□
□□□□□□□□□□□□□□□□□□□□□□□□□□
□□□□□□□□□□□□□□□□□□□□□□□□□□□□□□□□□□□□
□□□□□□□□□□□□□□□□□□□□□□□□□□□□□□
□□□□□□□□-□□□□ □□□□□□□□□□□□□□□□□□□
□□□□□□□□□□□□□□□□ PVD □□□□□□□□□□□□□□□□□□
□□□□□□□□□□□□□□□□□□□□□□□□□□□□□□ □□□□□ 1/2”

□□□□□□□□
□□□□□□□□
□□□□□□□□
□□□□□

Fingerprint-
Proof

□□□□□□□
PVD

□□□□□□□
□□□□□□□□□□□
□□□□□□□□
□□□□□-□□□

□□□□

Product height (mm): 313
Product width (mm):
Product depth (mm):
Product length (mm):
Net weight (Kg): 1,65

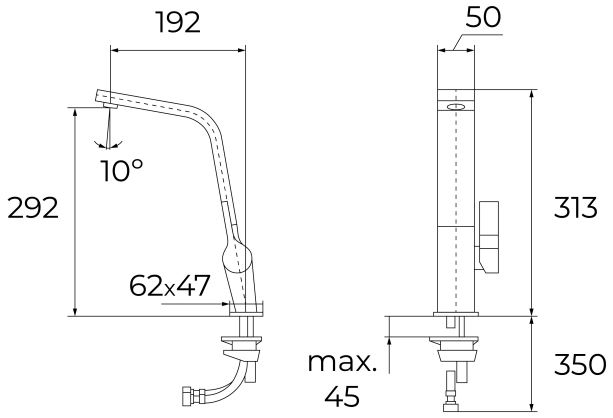

□□

116030006 □□□□□□□□□□□□□

116030005 □□□□□□□□□□□□□□