Universe 80 T-XP 2B

□□□□□□□□□□□□□□□□□□□□□□□□□□□ 2 □□□□□ □□□□□□□□□□□□□□□□□□□□□□□□□□□□□□ □□□□□ 80 □□.

□□□□□□□□□□□□

□□□□□□□
□□□□□□□
□□□□□□□□
□□□□□□□

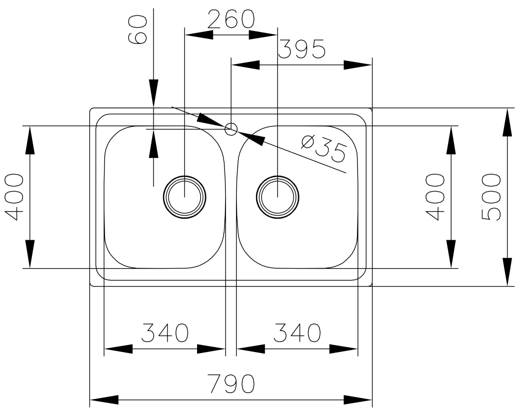

□□□□□□□□□□□□□□□□□□□□

REF: 115040009 EAN: 8434778015201

□□□□□□□□□□□□□□□□□

□□□□□□□□□□□□□□ Universe □□□□□□□□□
□□□□□□□□□□□□□□□□□□□□□□□□□□□□□□□
1 □□□□□
□□□□□□□□□□□□□□□□□□□□□□□□□□□□□□□□□□
□□□□□□□□□□□ □□□□□ 3½" □□□□□□□□□□□□□□□□□□□
□□□□□□□□ 170 □□.
□□□□□□□□□□□□□□□□□□□□□□□□□□□ 80 □□. □□□□□□□□

□□□□□

Product height (mm):
Product width (mm): 500
Product depth (mm):
Product length (mm): 790
Net weight (Kg): 3,72

□□

115040009 □□□□□□□□□□□□□□□□□□□□