DirectSense IZF 99700 MST
[illegible] (Induction) [illegible] FullFlex [illegible]
[illegible] [illegible]

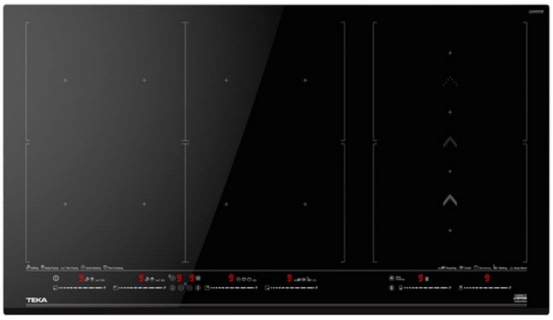

Flex

[illegible]

[illegible]

[illegible]

[illegible]

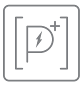

[illegible]

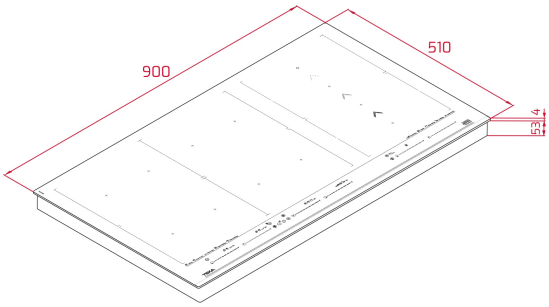

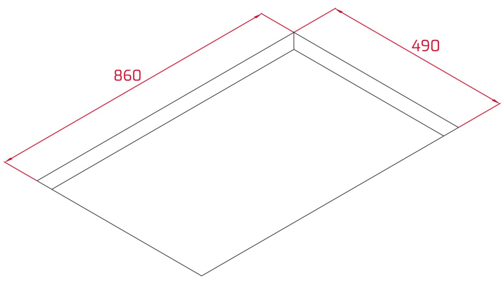

[illegible]

REF: 112500031 EAN: 8434778011876

[illegible]

[illegible] (induction) [illegible] MasterSense
[illegible] FullFlex
[illegible]
[illegible](SlideCooking Function)
[illegible] [illegible]
[illegible]:[illegible] (Rice cooking), [illegible](Simmering), [illegible]-
[illegible](Melting), [illegible](Keep Warm), [illegible](Grilling),
[illegible](Pan Frying), [illegible](Deep Frying), [illegible](Confit), [illegible]
[illegible](Poach), [illegible](Quick boiling)
[illegible] [illegible]
[illegible]
[illegible] 6 [illegible]
[illegible] (Induction) 6 [illegible] [illegible] Ø 262,5 X 195 [illegible].
[illegible]
[illegible] [illegible]
[illegible]
[illegible]
[illegible]
[illegible] [illegible]
[illegible]
[illegible]
[illegible]
[illegible] Easy installation kit
[illegible] 11,100 [illegible]

[illegible]

Product height (mm): 57
Product width (mm): 900
Product depth (mm): 510
Product length (mm):
Net weight (Kg): 20

[illegible]

[illegible] (V): 220-240
[illegible] (Hz): 50/60
[illegible] (W): 11100

[illegible]

112500031 [illegible]

[illegible]

Power consumption in standby mode (W): 0.4
Time to reach standby mode (min): 1