MGE 231 NXS

[illegible]+[illegible] [illegible] [illegible] 23 [illegible]

[illegible]

[illegible]

[illegible]

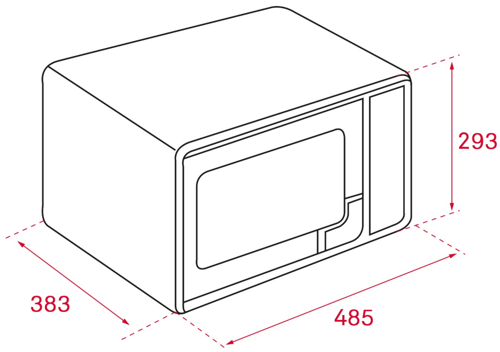

[illegible]

REF: 112240000 EAN: 8434778002607

[illegible]

[illegible]+[illegible] [illegible] Freestanding
3 [illegible]
8 [illegible]
[illegible] 8 [illegible]: 800 [illegible]
[illegible]: 1,000 [illegible]
[illegible]
[illegible] [illegible]
[illegible] 2 [illegible]
[illegible]
[illegible]
[illegible]
[illegible]
[illegible] ([illegible]/[illegible]): 23 / 18.8 [illegible]

[illegible]

Product height (mm): 293
Product width (mm): 485
Product depth (mm): 383
Product length (mm):
Net weight (Kg): 13,7

[illegible]

[illegible] MWO (W): 800
[illegible] (Hz): 50HZ
[illegible] (W): 1250
[illegible] (W): 1000

[illegible]

112240000 [illegible]