YZC 32600
□□□□□□□□□□□□□ □□□□□□□ VarioPro

□□□□□□□□
□□□□

□□□□□□□□□□□□□□

REF: 112660000 EAN: 8434778014846

□□□□□□□□□□□□

□□□□□□□□□□□□□ □□□□□□□ VarioPro
□□□□□□□□□□□□□□□□□□□□□ 6 □□□□□
□□□□□□□□□□□□□□□□□□□□□□□□□□□□□ ergonomic design
2 □□□□□□□□□□□□□□□□□□
2 □□□□□□ □□□□ Ø 376 X 118 □□.
□□□□□□□□□□□□□□□□□□□□□
□□□□□□□□□□□□□□□□□□□□□□□□□ Easy installation kit
□□□□□□□□□□□□□□□□□□□ 2,400 □□□□□

□□□□

Product height (mm): 79
Product width (mm): 300
Product depth (mm): 510
Product length (mm):
Net weight (Kg): 9,3

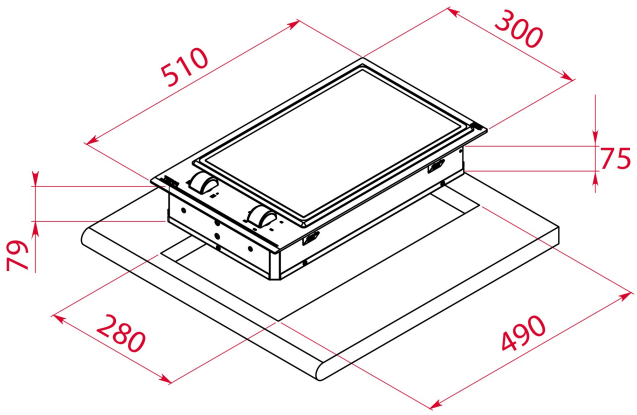

□□□□□□□□□□□□□□□□□□□□□□□□□

□□□□□□□□□□□□ (V): 220-240
□□□□□□□□ (Hz): 50/60
□□□□□□□□□□□□□□□□□□□ (W): -

□□

112660000 □□□□□□□□□□□

□□□□□□□□□□□□□□□□□□□□□□□□□□□□□

Power consumption in standby mode (W): -
Time to reach standby mode (min): -