CLC 8350 MC
[illegible] [illegible]

[illegible]

REF: 111630005 EAN: 8434778019704

[illegible]

[illegible] [illegible] (Built-in) [illegible] [illegible]
[illegible] (Small/Medium/Large/Extra Large-Infusions)
[illegible] [illegible]
[illegible]: 1 [illegible]
[illegible] 5 [illegible]
[illegible]
[illegible] LED [illegible]-[illegible]
[illegible] [illegible]
[illegible]
[illegible] [illegible] 3 [illegible]
[illegible] 19 [illegible]
[illegible] 1 [illegible]
[illegible]
[illegible] [illegible]
[illegible]: Nespresso®,Lavazza®,Caffitaly®,E.S.E.

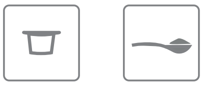

[illegible] [illegible]

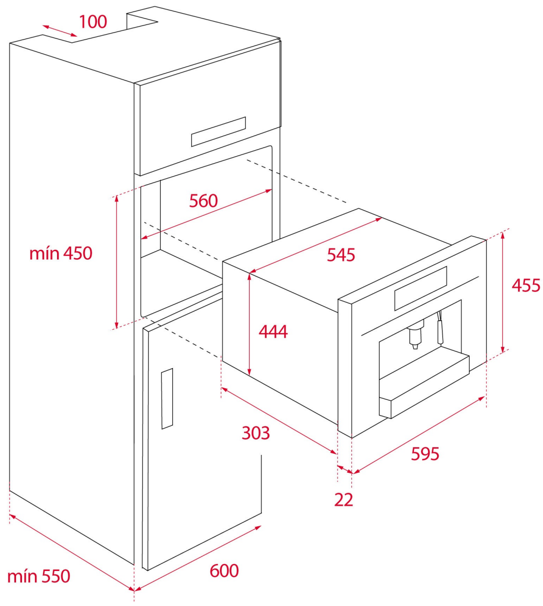

[illegible]

Product height (mm): 455
Product width (mm): 595
Product depth (mm): 330
Product length (mm):
Net weight (Kg): 18,7

[illegible]

[illegible] (V): 230
[illegible] (Hz): 50
[illegible] (W): 2200

[illegible]

111630005 [illegible]