DVI 88-G1 EOS BM

□□□□□□□□□□□□□□□□□□□□□□□□□ (Vertical) □□□□□□□□□□ Infinity G1 □□□□□□□□□□ Giugiaro Italdesign □□□□□□□□□□□□□□

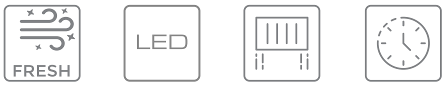

□□□□□□□□□□ □□□□□□□ | □□ LED | □□□□□□□ □□□□□□□□□ □□□□□□□ □□□□□□□□□ | □□□□□□□□ □□□□□□□□ □□□□□□□□ □□□□□□□ □□□□□□□□□□

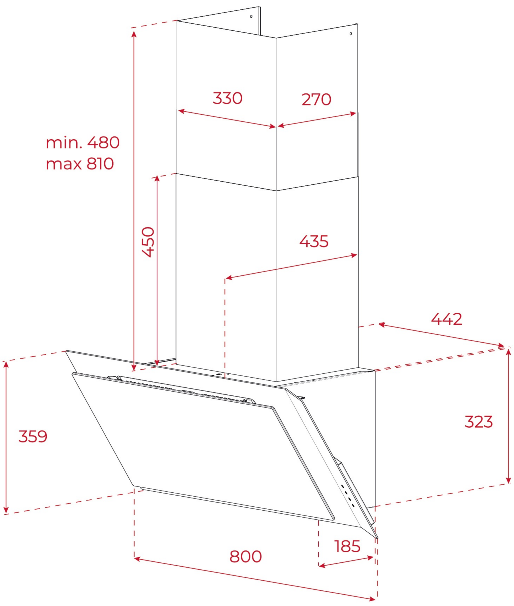

□□□□□□□□□□□□□□□□□□

REF: 112930056 EAN: 8434778022018

□□□□□□□□□□□□□□

□□□□□□□□□□□□□□□□□□□□□□□□□□□□□ Infinity G1
□□□□□□□□□□□ Giugiaro Italdesign □□□□□□□□□□□□□□□
□□□ (Vertical hood)
□□□□□□□□□□□□□□□□□□□□□□□□□□□□□-□□□□□□□□ □□□□□□□□□□ LED
□□□□□□□□□□□□□□□□□□□□□□□□□□□□□□□□□□ (FreshAir function)
□□□□□□□□□□□□□□□□□□□□ 3 □□□□□□ □□□□ 1 □□□□□□□□□□□□□□□□□□□
□□ (□□.□./□□.): 698
□□□□□□□□□□□□□□□□□□□□□□□□ (□□.□./□□.): 558
□□□: 69.9 □□□□□□□□□
□□□□□□□□□□□□□ LED 1 □□□□
□□□□□□□□□□□□□□□□□□□□□□□□□□□□□□□□□ 2 □□□□□
□□
□□
□□□□□□□□□□□□□□□□□□□□□□□□□□□□□□□□□□□□□
□□□□□□□□□□□□□□□□□□□□

□□□□□

Product height (mm): 810-1140
Product width (mm): 800
Product depth (mm): 409
Product length (mm):
Net weight (Kg): 17,5

□□□□□□□□□□□□□□□□□□□□□□□□□□□□□□

□□: A+
□□□□□□ (LwA) □□□□□□□□□□□□□□□□□□ (dB): 47,4
□□□□□□ (LwA) □□□□□□□□□□□□□□□□ (dB): 60
□□□□□□ (LwA) □□□□□□□□□□□□□□□□□□□□□ (dB): 71,1
Ø □□□□□□□□ (mm): 150

□□

■ 112930056 Black matt