MasterSense Air AFC 87628 MST

□□□□□□□□□□□□□□□□□ (Induction) □□□□□□□□□□ FullFlex □□□ □□□□□□□□□□□□□□□ □□□□□□□□□□□□□□□□□□□□□□□□□□□□□

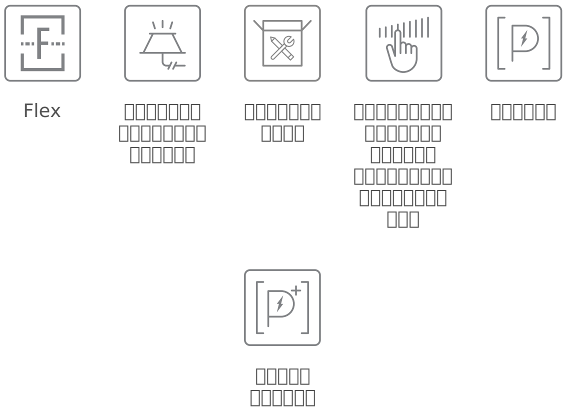

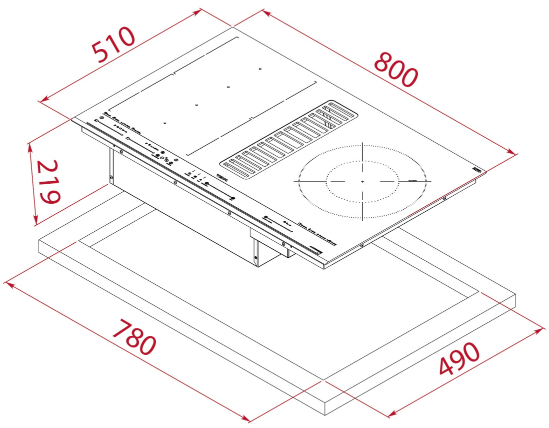

□□□□□□□□□□□□□□□□□

REF: 112500053 EAN: 8434778020878

□□□□□□□□□□□□□□

□□□□□□□□□□□□□□□□□ (Induction) □□□□□□□□□□□□□□□□□□□□□□□□□□□□□□□□
□□□□□□□□□□□□□□□□□□□□□□□□□□□□□□□□□□□□□□□
□□□□□□□□□□□□□□□□□□□□□ □□□
□□□□□□□□□□□: □□□□□(Confit), □□□□□□□□(Poach), □□□□□(Grilling), □□□□(Pan Frying), □□□□□□□□(Deep Frying), □□□□□(Simmering), □□□□□□□□□□-□□□□□□□□□□(Melting)
□□□□□□□□□□□□□□□□□□□□□□□□□□□□□□□□□□□□□□□ □□□□□□□□□□□□□□□□□□□□□□□□□□□□□□
□□□□□□□□□□□□□□□□□□□□□□□□□□□□□□□□□
□□□□□□□□□□□□□□□□□□□□□□ (Induction) □□□□□□□□□□□□□ 3 □□□□□
□□□□□□□□□□□□□□□□□□□□□□□□□□
□□□□□□□□□□□□□□□□□□□□□□ □□□□□□□□□□□□□□□□□□□□□□□
□□□□□□□□□□□□□□□□□□□□□□□□□□□□□□
□□□□□□□□□□□□□□□□□□□□□□□□□□□□□□□
□□□
□□□ □□□□□□□□□□□□□ □□□□□□□□□
□□□□□□□□□□□□□□□□□□□□□□□□□□□□□□□□□□□
□□□□□□□□□□□□□□□□□□□□□□□□□□□□□□□ Easy installation kit
□□□□□□□□□□□□□□□□□□□□□□□ (□□□□□□□): 7,200 (□□□□□□□□□□□□□□□□□□□□□) + 200 (□□□□□□□□□□□□□□□□□)
Optional: Teppanyaki and grilling plate
□□□ 24 □□□□□□□□□□□□□□□
□□□□□□□□□□ FreshAir □□□□□□□□□□□□
□□□□□□□□□□□□□□□□□□□□□□□□□□□□□□ □□□□ Brushless EcoPower □□□□□□□□□ □□□□□□□□□□
□□□□□□□□□□□□□□□□□□ 9 □□□□□□
□□□ □□□□□□□□□□□□□□□□□ (dBA): 66
□□□ □□□□□□□□ (dBA): 65
□□□ □□□□□□□□ (dBA): 43
□□□□□□□□□□□□□□□□□□□□□□□□□□□□□□□□□□□□□□ 12 □□□□□ □□□□□□□□ 2 □□□□□ 2
□□□
□□

□□□□□

Product height (mm): 219
Product width (mm): 800
Product depth (mm): 510
Product length (mm):
Net weight (Kg): 25

□□□□□□□□□□□□□□□□□□□□□□□□□□□□□□□

□□□□□□□□□□□□□□□□ (V): 220-240
□□□□□□□□□□□ (Hz): 50/60
□□□□□□□□□□□□□□□□□□□□□□□□□□ (W): 7200 (IH) + 200 (AH)

□□

□□□□□□□□□□□□□□□□□□□□□□□□□□

Power consumption in standby mode (W): -
Time to reach standby mode (min): -