TBC 64010 TTC
[illegible] 4 [illegible], [illegible] 60 [illegible].

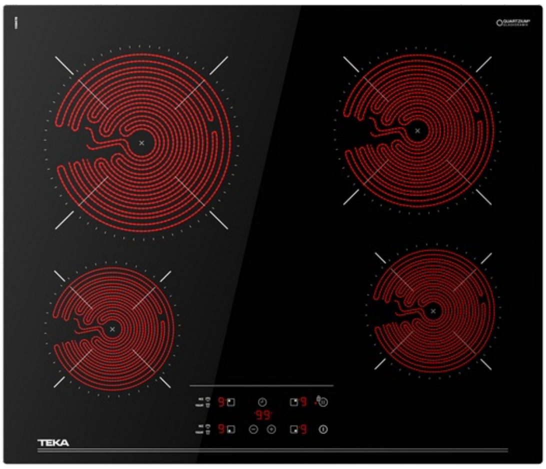

[illegible] [illegible] [illegible]

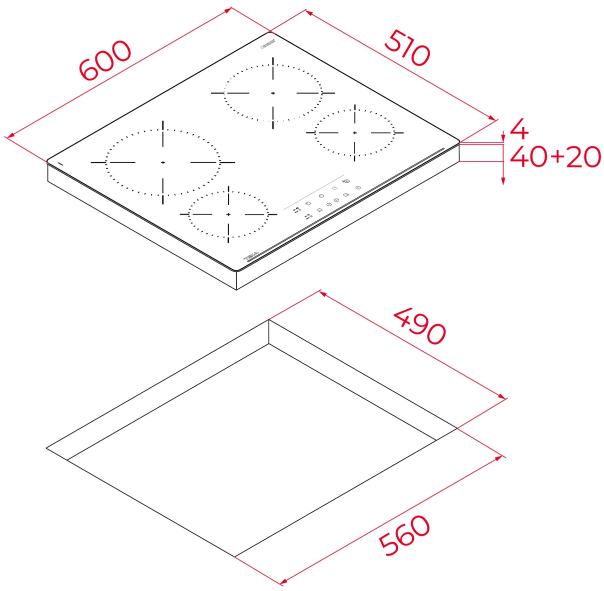

[illegible]

REF: 112550014 EAN: 8434778019933

[illegible]

[illegible]
[illegible]
[illegible] 4 [illegible]
1 [illegible] Ø 210 [illegible].
1 [illegible] Ø 180 [illegible].
2 [illegible] Ø 145 [illegible].
[illegible]
[illegible] [illegible]
[illegible]
[illegible] [illegible]
[illegible] Easy installation kit
[illegible] 6,300 [illegible]

[illegible]

Product height (mm): 63
Product width (mm): 600
Product depth (mm): 510
Product length (mm):
Net weight (Kg): 8,5

[illegible]

[illegible] (V): 220-240
[illegible] (Hz): 50/60
[illegible] (W): 6300

[illegible]

112550014 [illegible]

[illegible]

Power consumption in standby mode (W): -
Time to reach standby mode (min): -