LOTUS 80 B-TG 2B 1D

□□□□□□□□□□□□□□□□□□□□□□□□□□□□□□ 2 □□□□ 1 □□□□□□□ □□□□□□□□□□□□□□□□□□□□□□□□□□□□

□□□□□□□□□□□□□□□

REF: 115410000 EAN: 8434778028430

□□□□□□□□□□□□□

□□□□□□□□□□□□□ Lotus □□□□□□□□
□□□□□□□□□□□□□ Tegranite+
2 □□□□ 1 □□□□□□□
□□□□□□□□□□□□□□□□□□□□□□□□□□
□□□□□□□□□□□□□□□□□□□□□□□□□□□□ □□□□□□□□□□□□□□□□□□□□□□□□□□□□
□□□□□□□□□□□ UV □□□□□□□□□□□□□
□□
□□□□□□□□□□ □□□□□ 3½" □□□□□□□□□□□□□□□□□□
□□□□□□□□ 200 □□.
□□□□□□□□□□□□□□□□□□□□□□ 80 □□. □□□□□□□

200 □□.

□□□□□□□□□□

□□□□

Product height (mm):
Product width (mm): 500
Product depth (mm):
Product length (mm): 1.160
Net weight (Kg): 18,58

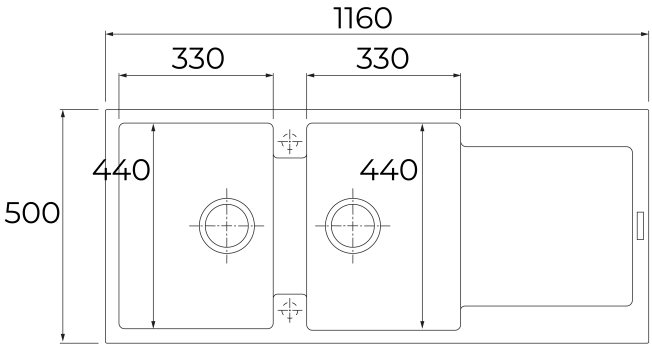

□□

115410000 Black matt