ML 820 FI BK

[illegible] [illegible] [illegible] [illegible]
20 [illegible]

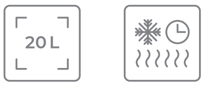

20 [illegible]

[illegible]

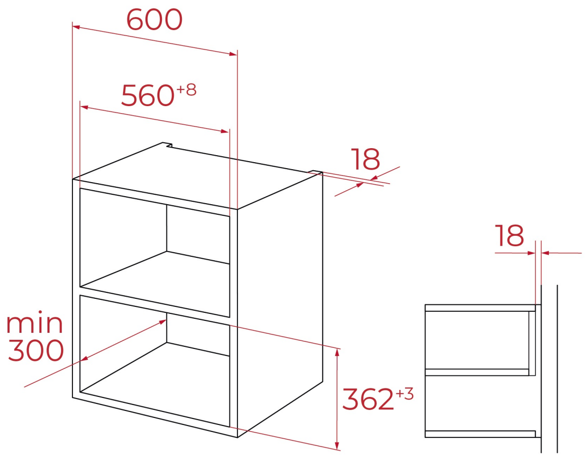

[illegible]

REF: 112070004   EAN: 8434778029383

[illegible]

[illegible] [illegible]
1 [illegible]
[illegible] 5 [illegible], 800 [illegible]
[illegible] 0-95 [illegible]
[illegible]
[illegible] [illegible]
[illegible] 2 [illegible]
[illegible]
[illegible] [illegible]
[illegible] 0-95 [illegible]
[illegible]
[illegible] Ø24.5 [illegible].
[illegible] ([illegible]): 20 [illegible]
[illegible]

[illegible]

Product height (mm): 386
Product width (mm): 594
Product depth (mm): 317
Product length (mm):
Net weight (Kg): 16,5

[illegible]

[illegible] MWO (W): 800
[illegible] (Hz): 50
[illegible] (W): 1250
[illegible] (W): -

[illegible]

112070004 [illegible]