HSB 645

Hydroclean

70 □□□□

□□□□□□□□□□ □□□□□□□□ □□□□□□ □□□□□□□□□□ □□□□□□□

□□□□□□□□ □□□□□□□□□□ □□□□□□ □□□□□□□□□□ □□□

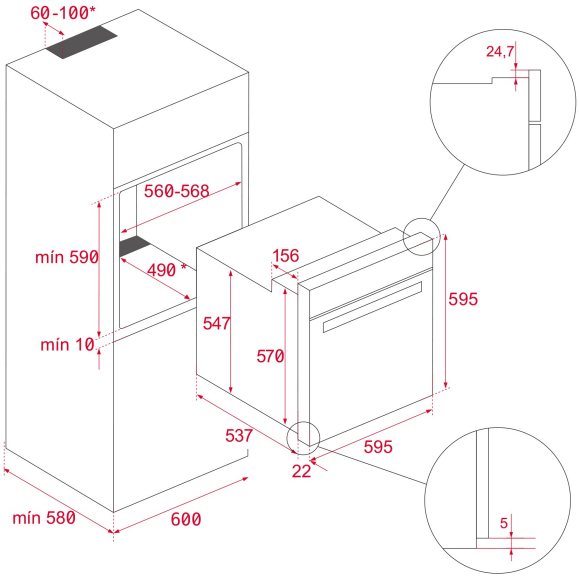

□□□□□□□□□□□□□□□

REF: 41560150 EAN: 8421152148969

□□□□

Product height (mm): 595
Product width (mm): 595
Product depth (mm): 537+22
Product length (mm):
Net weight (Kg): 28

□□□□□□□□□□□□□□□□□□□□□□□

□□□□□□□□□□□□□□□□□□□□□□□□□□□□□□□□□: A+
□□□□□□□□□□□□ (V): 220-240
□□□□□□□□ (Hz): 50/60
□□□□□□□□□□□□□□□□□□□ (W): 3215

□□

41560150 □□□□□□□□□□□□□□□