HLB 838
[illegible] 60 [illegible].

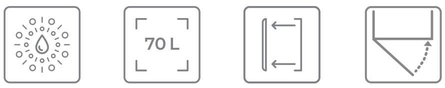

Hydroclean | 70 [illegible] | [illegible] | [illegible]-[illegible]

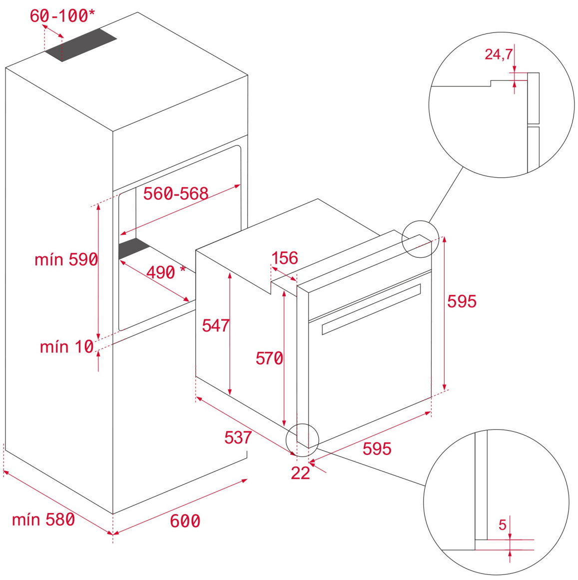

[illegible]

REF: 41560310 EAN: 8421152156674

[illegible]

[illegible]
9 [illegible]
[illegible] HydroClean® PRO
[illegible]
[illegible] A+: [illegible] 20%
[illegible]: 71/70 [illegible]
[illegible] LED [illegible] LED
[illegible]
[illegible]
[illegible] 3 [illegible]
[illegible] SoftClose [illegible]
[illegible]
[illegible] 1 [illegible]
[illegible]
[illegible]

[illegible]

Product height (mm): 595
Product width (mm): 595
Product depth (mm): 537+22
Product length (mm):
Net weight (Kg): 28

[illegible]

[illegible]: A+
[illegible] (V): 220-240
[illegible] (Hz): 50/60
[illegible] (W): 3215

[illegible]

41560310 [illegible]